TYPE WP-RN2SP

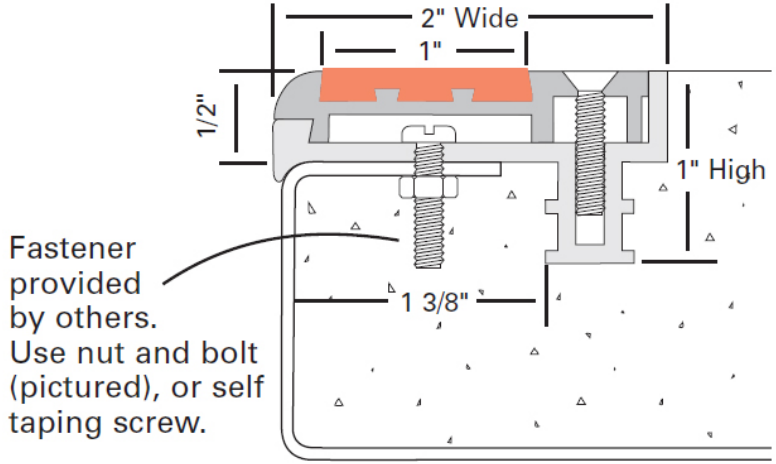

WOOSTER PRODUCTS INC.

http://www.woosterproducts.com

Furnished with disposable wood insert for use during construction.

Max length in one section is 8'0"
Lengths over max will be made in equal sections

			LENGTH	QTY	COLOR
JOB NAME:		PAGE: OF			
CUSTOMER:		NOTES:			
PO#					
ARCHITECT:					
COMPANY:					
CONTACT:					
ADDRESS:					
CITY,ST,ZIP					
PHONE:					
FAX:					